MO330 | PENDANT

MADS ODGÅRD | 2020

Shade: powder coated steel

	Colors
Black (RAL9005)	•
White (RAL9010)	•

SOCKET: E12 or E14 socket depending on country.
BULB: Not included.
WIRE: 2.5m. black fabric wire.
SUSPENSION: A standard black ceiling mount is included.

	Light source socket	Max. watt	Voltage/frequency	Weight kg.	Electric shock protection	Ingress protection
EU	E14	15W	Max. 220-240V/50-60Hz	0.8 kg.	Class II	IP20
US	E12		120V/60Hz			
JAPAN			100V/50 Hz			

Recommended light source used for measurements:

- Phillips LED
- T25 1.7W E14 220-240V
- Warm white
- 1.7W = 15W
- 150 lumen
- 2700K

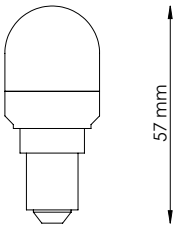

MO330 | PENDANT

MADS ODGÅRD | 2020

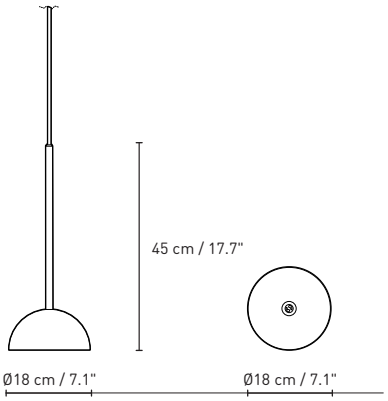

Packaging dimensions	Height mm.	Width mm.	Length mm.	Cbm	Net kg.	Tara kg.	Gross kg.	Cartons
Pendant	536	296	233	0.03	0.8	0.8	1.6	1/1

Polar

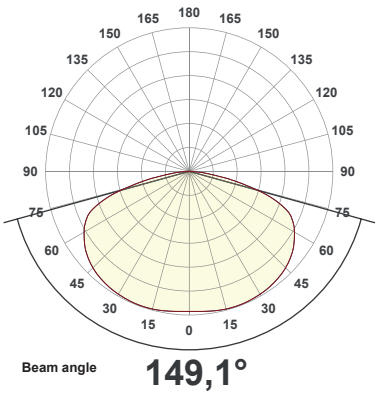

Footcandles

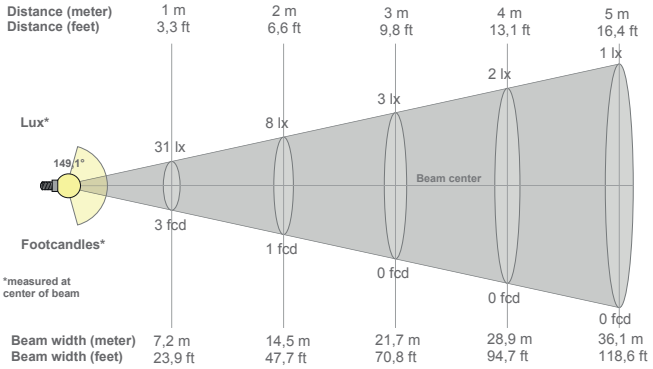

Isolux

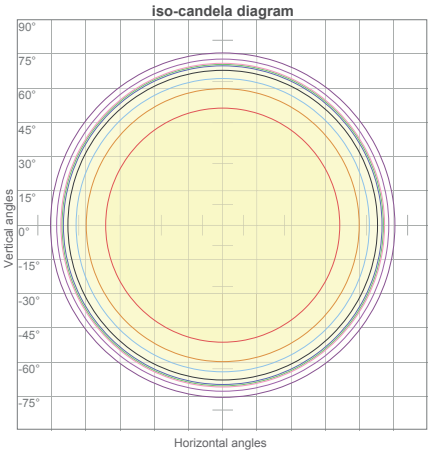

10%	3 cd
20%	6 cd
30%	9 cd
40%	12 cd
50%	16 cd
60%	19 cd
70%	22 cd
80%	25 cd
90%	28 cd

Conditions:

Number of c-planes: 40

Candela at center: 31 cd

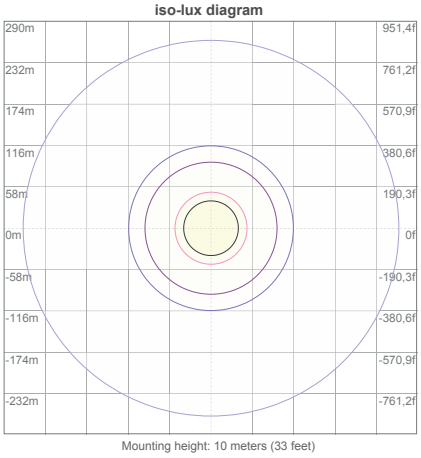

3%	9,37m lx
5%	15,6m lx
10%	31,2m lx
30%	93,7m lx
50%	0,156 lx

Conditions:

Number of c-planes: 40

Lux at center: 0,312 lx

Lux distribution on a surface when lamp is mounted at 10 meters from the surface.